International Journal of Innovative Computing, Information and Control
Volume **16**, Number **2**, April **2020**

ICIC International ©2020 ISSN 1349-4198
pp. 415–428

ROBUST SPEED CONTROL OF BRUSHLESS DC MOTOR BASED ON ADAPTIVE NEURO FUZZY INFERENCE SYSTEM FOR ELECTRIC MOTORCYCLE APPLICATION

Heri Suryoatmojo, Danis Rizky Pratomo, Soedibyo, Mohamad Ridwan
Dedet Candra Riawan, Eko Setijadi and Ronny Mardiyanto

Department of Electrical Engineering
Institut Teknologi Sepuluh Nopember
Kampus ITS, Sukolilo, Surabaya 60111, Indonesia
suryomgt@gmail.com

Received July 2019; revised November 2019

Abstract. *Electric vehicles have been widely discussed in some articles since the cost of fuel for conventional vehicles in this era is not stable and tends to increase. And also, conventional vehicles are also not fully eco-friendly and have poor efficiency. Electric vehicles, mostly, use Brushless Direct Current (BLDC) motor as the prime mover, since it has a simple structure, good performance and high efficiency. This paper presents an Adaptive Neuro Fuzzy Inference System (ANFIS) controller to control the speed of BLDC motor applied for electric motorcycle. ANFIS controller was designed and evaluated, then compared to Proportional-Integral-Derivative (PID) and Fuzzy-PID controllers. ANFIS is trained based on the data of Fuzzy-PID performances with slight modification. According to the study, ANFIS controller has better performances compared to PID and Fuzzy-PID controllers with average steady state error of 0.13% when the speed reference changes and 0.16% when the load changes. Moreover, ANFIS controller obtains 0.27 s for rise time according to 3000 rpm of speed reference, while the other controllers have longer time to reach the speed reference.*

Keywords: Brushless direct current motor, Speed controller, Adaptive neuro fuzzy inference system

1. **Introduction.** Nowadays, the price of fuel for conventional vehicles is not stable and tends to increase. Conventional vehicles are also not fully eco-friendly and have poor efficiency compared to electric vehicles. That becomes the reasons to develop more efficient and environmentally based vehicles [1], such as electric vehicles. Institut Teknologi Sepuluh Nopember (ITS) has fully supported in the development of electric vehicles in Indonesia. Garansindo Electric Scooter ITS (GESITS) is an electric motorcycle developed by ITS.

Brushless Direct Current (BLDC) motor is a type of Direct Current (DC) motor with an electric commutation scheme. This type of motor has several properties including high efficiency, large speed range, rapid dynamic response, long operating life, high reliability, and can be accurately controlled [1,2]. Because of these advantages, BLDC motors are widely used in various fields, one of which is used on electric motorcycles, such as GESITS.

The speed of BLDC motor can be controlled by changing the voltage of the stator windings. One of methods for controlling the stator voltage is Pulse Width Modulation (PWM) control method. PWM signal creates voltage variations by chopping the gating signal in an inverter. The method has simple structure and is commonly applied to BLDC motors [3]. A control system is needed to adjust the duty cycle of PWM signal.

DOI: 10.24507/ijicic.16.02.415

The control system that is commonly used in BLDC is Proportional-Integral-Derivative (PID) controller [1] due to its simplicity and easy to use. Although PID controller is simple and easy to use, sudden changes in set-point and variations of plant parameters make the response of PID become worse [4] because PID controller is only good for linear system. To overcome some drawbacks of PID controller, Fuzzy is used for adaptively PID parameters setting, namely Fuzzy-PID. Fuzzy-PID controller has a good response in controlling complex and non-linear systems compared to PID controller [5], meanwhile, Fuzzy-PID controller requires more memory [6] and needs considerable changes when the system parameters are changed significantly because there is no training method in Fuzzy-PID structure. On the other hand, Neural Network (NN) is an algorithm that is commonly used to train a system in order to achieve the desired output values. By combining NN and Fuzzy system, Adaptive Neuro Fuzzy Inference System (ANFIS) is discussed in this paper to control the speed of BLDC motor. ANFIS speed controller is a speed control system on BLDC motors that combines fuzzy control systems and Neural Networks (NN) [7]. ANFIS algorithm can form a membership and rule function by training FIS according to the desired input and output data [8]. In addition, the speed response of the ANFIS control system can be better than its supervision [6-11]. Therefore, in this paper, it is proposed to use ANFIS controller as BLDC speed control method with Fuzzy-PID as supervisor of ANFIS itself.

This paper proposed a Fuzzy-PID supervised ANFIS controller to control the speed of BLDC motor applied for electric motorcycle. The paper is organized as follows. Section 2 describes BLDC motor and speed control scheme. Section 3 explains about design and system modeling. Proposed ANFIS for BLDC speed controller is presented in Section 4. Section 5 presents the results and analysis. Finally, Section 6 makes conclusion.

2. **BLDC Motor and Speed Control Scheme.** BLDC motor is a kind of 3-phase motor, and has three windings on the stator side. The windings can be sinusoidal or trapezoidal type [2]. Both types are categorized based on the shape of the BEMF (Back-Electromotive Force). The shape of the sinusoidal BEMF is determined by the difference in the relationship of the coil and the distance from the air gap [2]. Electric motor with sinusoidal signal form produces finer electromagnetic torque compared to one with a trapezoidal signal form. The price, however, will be more expensive due to some additional components such as chopper windings needed [2]. In BLDC motor, the type of stator coil is trapezoidal. The working principle of a BLDC motor is based on the tensile force and opposing force between the magnet poles [9]. The current passes through one of the stator coils, and produces a magnetic pole that will pull the opposite pole from the closest permanent magnet. By alternately flowing the stator coil, it will cause the rotor to spin [2]. By assuming that each phase is uniform, Figure 1 shows the components of BLDC motor, electrical and mechanical components.

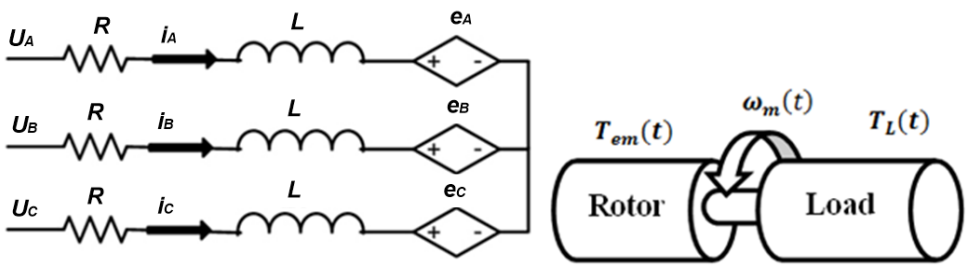

Figure 1. Components of BLDC motor

The voltage phase equation in BLDC motor is expressed as:

$$\begin{bmatrix} u_A \\ u_B \\ u_C \end{bmatrix} = \begin{bmatrix} R & 0 & 0 \\ 0 & R & 0 \\ 0 & 0 & R \end{bmatrix} \begin{bmatrix} i_A \\ i_B \\ i_C \end{bmatrix} + \begin{bmatrix} L-M & 0 & 0 \\ 0 & L-M & 0 \\ 0 & 0 & L-M \end{bmatrix} \frac{d}{dx} \begin{bmatrix} i_A \\ i_B \\ i_C \end{bmatrix} + \begin{bmatrix} e_A \\ e_B \\ e_C \end{bmatrix} \tag{1}$$

while the equation for phase to phase voltage is obtained from phase voltage substraction:

$$\begin{bmatrix} u_{AB} \\ u_{AC} \\ u_{CA} \end{bmatrix} = \begin{bmatrix} R & -R & 0 \\ 0 & R & -R \\ -R & 0 & R \end{bmatrix} \begin{bmatrix} i_A \\ i_B \\ i_C \end{bmatrix} + \begin{bmatrix} L-M & M-L & 0 \\ 0 & L-M & M-L \\ M-L & 0 & L-M \end{bmatrix} \frac{d}{dx} \begin{bmatrix} i_A \\ i_B \\ i_C \end{bmatrix} + \begin{bmatrix} e_A - e_B \\ e_B - e_C \\ e_C - e_A \end{bmatrix} \tag{2}$$

The electromagnetic torque of BLDC motor is given as [7]:

$$T_{em} = J\frac{d\omega_r}{dt} + B\omega_r + T_L \tag{3}$$

where J, B, ω_r and T_L denote moment of inertia, frictional coefficieant, angular velocity, and load torque respectively.

BLDC motor uses electric switches (IGBT/MOSFET) to process the commutation sequence. For 3-phase BLDC motor, the electric switches are arranged in 3-phase (full bridge) configuration. 3-phase BLDC motor requires 3 hall sensors (H_a, H_b, and H_c) to detect the rotor position [9]. Hall sensors have 2 types of output, 60° and 120°, based on the position of the hall sensor [2]. By combining 3 hall sensors, a commutation sequence can be determined from the motor and 8 conditions will be obtained from the initial 3 hall sensors from 000 to 111. However, due to the limitations of the device, 000 and 111 conditions may not appear [9]. So there are only 6 states from the hall sensor combination. It takes 6 steps to complete 1 electric cycle. At each step, one terminal is energized, another one is energized in the opposite direction, and the other terminal is not energized (floating).

If a BLDC motor is commutated as its sequence, BLDC motor will rotate and result speed. When it is installed as a prime mover in electric vehicles, the speed needs controlled to obtain the desired speed of vehicles. In this paper, ANFIS is proposed as BLDC motor speed controller for electric motorcycle application.

3. **Design and System Modeling.** The design of the BLDC motor speed control system was done using MATLAB Simulink software. The system designed is composed of several blocks including the Inverter and DC Supply blocks, BLDC Motors, Decoders, PWM Generators and Switching Logic. Overall system designed can be shown in Figure 2.

Rotor position and rotor speed are obtained from the hall sensor and tacho-generator. The actual speed of BLDC motor would be compared to the reference speed to obtain error and the change of error values. The change of error is obtained by performing a differential operation on the error signal. Error and the change of error would be the input values of the ANFIS and Fuzzy-PID controllers, while PID controller has only one input, which is error value. The output of the controller is a control signal connected to the PWM generator. The control signal varies duty cycle of generated PWM signal. The

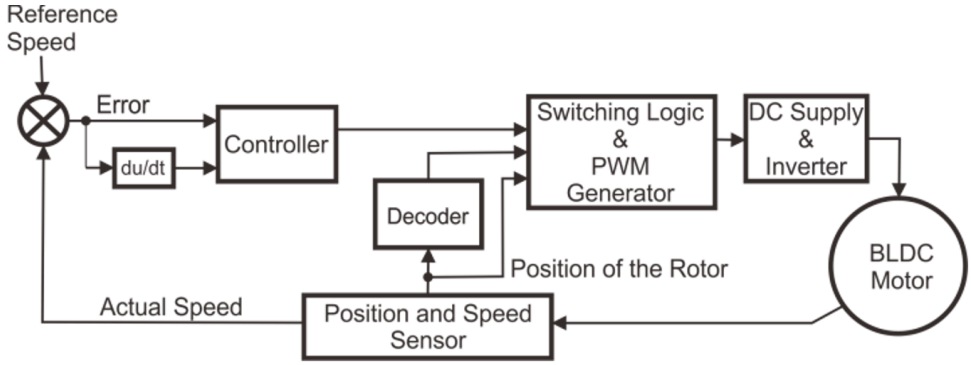

FIGURE 2. Overall system schematic

PWM signal will be connected by AND with gating signals generated by the switching logic block. So the gating signal will be chopped and the voltage value of the stator will be varied [1]. Before the gating signal is applied to the inverter, it would be compared to the BEMF and hall signal to produce the desired PWM signal combination.

In decoder, the signal given by the hall sensor is converted into BEMF signals. BEMF signals indicate whether the voltage of stator winding is positive (high), negative (low), or zero (floating). BEMF signals determined which signals regulate the on/off time of IGBTs. Gating signals will regulate the commutation process, so the motor could be rotating. The speed of BLDC motor depends on the amount of voltage applied to the motor. The magnitude of the RMS voltage applied to each motor phase can be adjusted using the PWM method. The PWM signal is connected to an AND gate to obtain the proper gating signal, so the gating signal will be chopped and the voltage on the motor can vary according to the duty cycle of the PWM signal. The frequency of the PWM signal is 25 kHz. Figure 3 shows the commutation process according to BEMF signals.

4. **Proposed ANFIS for BLDC Speed Controller.** ANFIS controller structure has 2 inputs, error and the change of error, and consists of 3 sub-controllers to obtain Kp, Ki, and Kd which would determine the duty cycle for PWM signals. ANFIS controller is supervised and trained offline based on Fuzzy-PID controller response. The response of Fuzzy-PID, then, is modified to train ANFIS controller to get the better response of the system. Figure 4 shows each sub controller diagram of ANFIS with Fuzzy-PID supervision.

The initial step in designing ANFIS controllers is getting pairs of input data. Input data for error (e) and the change of error (Δe) are obtained by linear interval method. By setting the range of values for error and error is -3000 to 3000 then dividing into 30 parts, it would get 900 input data. Then the input data is combined with the output data from the Fuzzy-PID controller as supervision of ANFIS. Pair of input and output data that has been obtained, then, is used as training data to train the parameters of the Takagi Sugeno FIS (Fuzzy Inference System) on ANFIS structure.

To form FIS that will train with the training data that has been obtained, grid partition method is used. FIS is formed by using *genfis* functions in MATLAB. Each input of sub-controllers, Kp, Ki, and Kd, has 2 membership functions in the form of Gauss function. In each sub-controller there will be $2 \times 2 = 4$ rules of fuzzy inference, in which each rule has an output in the form of a linear function with initial value parameter is 0. The formed FIS Takagi Sugeno would be trained offline using ANFIS hybrid algorithm, back-propagation and Recursive Least Square Estimation (RLSE).

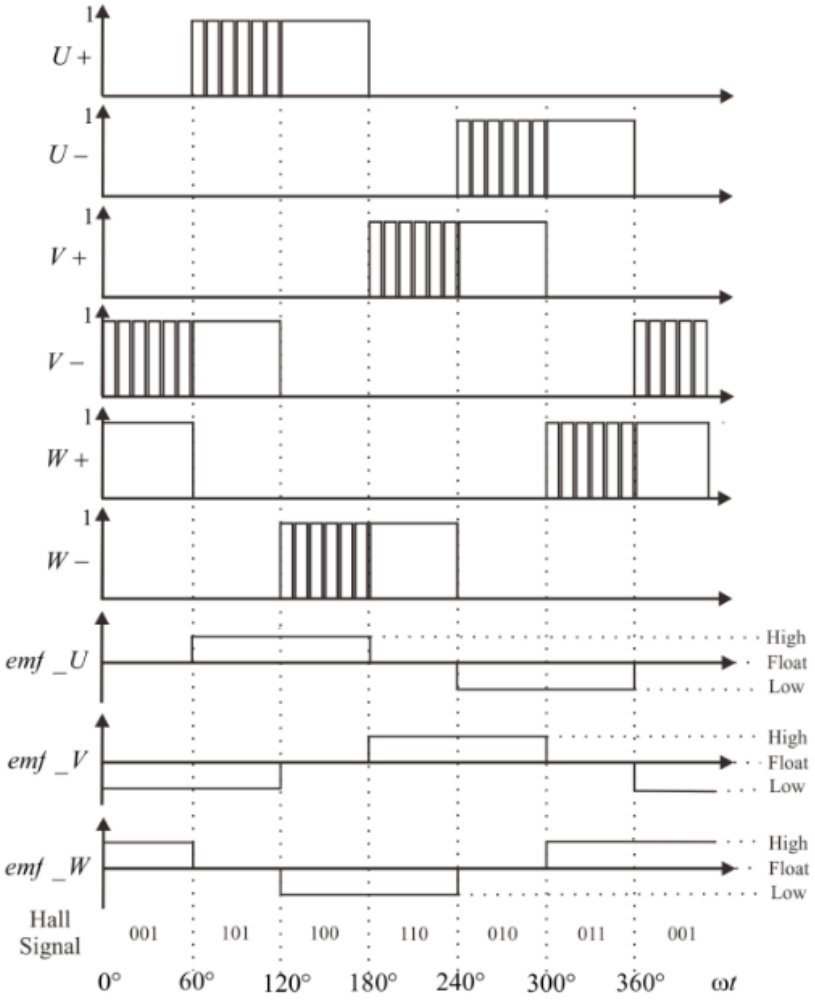

FIGURE 3. BLDC motor commutation process

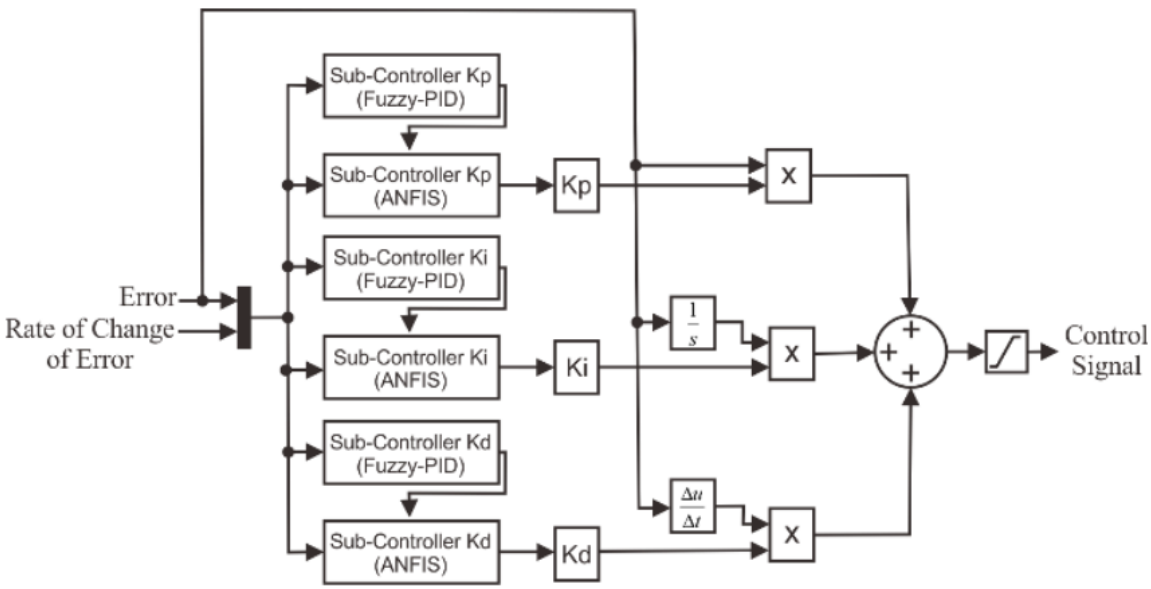

FIGURE 4. Proposed ANFIS controller based on Fuzzy-PID

Proposed ANFIS training method. The parameters trained in FIS consist of two parameters, which are premise parameters and consequent parameters. ANFIS hybrid learning algorithm is used to train the parameters and consists of the combination between back-propagation and RLSE algorithms. Premise parameters are trained using back-propagation, while the consequent parameters are identified by the RLSE algorithm. During backward pass, a signal that is moving backwards is an error signal between the output of training data and ANFIS output signals.

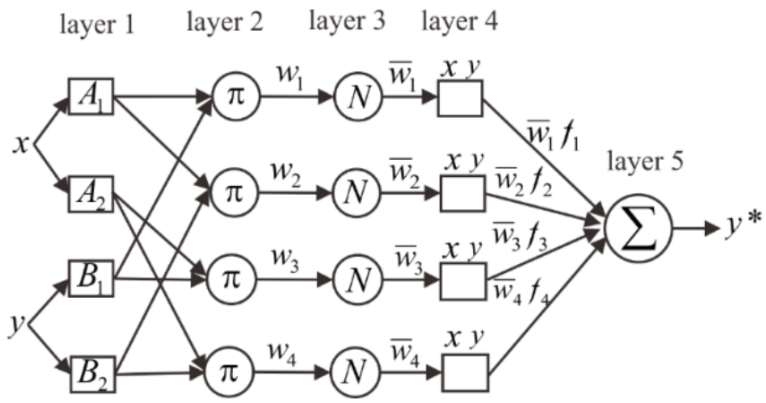

FIGURE 5. ANFIS learning structure

ANFIS structure is designed with 5 layers as shown in Figure 5. Each FIS has two inputs x (error) and y (the change of error). The set input error is expressed as A; while the change of error is B. Each input has 2 membership functions represented by the linguistic label Small (S) and Big (B). Then it has the output of linear z function. The Tagaki Sugeno FIS model can be written as:

Rule 1: if x is A_1 and y is B_1 then $z = f_1 = a_0^1 + a_1^1 x a_2^1 y$
Rule 2: if x is A_1 and y is B_2 then $z = f_2 = a_0^2 + a_1^2 x a_2^2 y$
Rule 3: if x is A_2 and y is B_1 then $z = f_3 = a_0^3 + a_1^3 x a_2^3 y$
Rule 4: if x is A_2 and y is B_2 then $z = f_4 = a_0^4 + a_1^4 x a_2^4 y$

• **Layer 1**

All nodes in layer 1 are adaptive nodes with equation:

$$O_{1,i} = \mu_{A_i}(x), \text{ for } i = 1, 2 \tag{4}$$

$$O_{1,i} = \mu_{B_i}(y), \text{ for } i = 3, 4 \tag{5}$$

x and y are inputs to the node ith, while $\mu_{A_i}(x)$ and $\mu_{B_i}(y)$ represent the degree of membership function of input. The membership function for x and y uses Gaussian functions in the form of:

$$\mu_{A_i}(x) = e^{\frac{-(\dot{x}-b_i)^2}{2c_i^2}}, \text{ for } i = 1, 2 \tag{6}$$

$$\mu_{B_i}(y) = e^{\frac{-(\dot{y}-b_i)^2}{2c_i^2}}, \text{ for } i = 3, 4 \tag{7}$$

$\{b_i$ and $c_i\}$ are set parameters. In line with changes to these parameters, it will cause variation of the membership function for input x (error) and y (the change of error). The parameters in this layer are called premise parameters.

• **Layer 2**

All nodes in this layer are fix nodes, where the output of each node is obtained from the product of all incoming signals. Each node represents the firing strength of the rule.

In general, other operator of t-norm which is AND operator in fuzzy logic can be used as node function in this layer. The expression of this condition is shown in Equation (8).

$$O_{2,i} = w_i = \mu_{A_i}(x) \times \mu_{B_i}(y) \tag{8}$$

• **Layer 3**

All nodes in this layer are fix nodes. The ith node calculates the ratio of the rule fire strength to the sum of all fire strengths. The output of this layer is normalized firing strengths

$$O_{3,i} = \bar{w}_i = \frac{w_i}{w_1 + w_2}, \quad i = 1, 2 \tag{9}$$

• **Layer 4**

Each node in this layer is an adaptive node which is formulated as:

$$O_{4,i} = \bar{w}_i f_i = \bar{w}_i \left(p_i x + q_i y + r_i\right), \quad i = 1, 2, 3, 4 \tag{10}$$

where $\bar{w}_i$ is a normalized firing strength of layer 3 and $\{p_i, q_i, r_i\}$ are set of parameters from this node, which are called consequent parameters.

• **Layer 5**

A single node in this layer is fix node that will sum all of input signals.

$$O_{5,i} = \sum_i \bar{w}_i f_i = \frac{\sum_i w_i f_i}{\sum_i w_i} \tag{11}$$

ANFIS is trained using hybrid method, which is back-propagation and Recursive Least Square Estimation (RLSE). Training data is obtained from Fuzzy-PID controller which was designed in advance, and then, it is slightly modified to obtain the best response before it is trained to ANFIS structure.

There are 3 sub-controllers of Fuzzy-PID to result Kp, Ki, and Kd. Each input of all sub-controllers has 5 membership functions: NB (*Negative Big*), NS (*Negative Small*), Z (*Zero*), PS (*Positive Small*), and PB (*Positive Big*), while the output is S (*Small*), M (*Medium*), B (*Big*), VB (*Very Big*), VVB (*Very-Very Big*). All those membership functions are represented as isosceles triangle function with input value from -3000 to 3000. The rules of each sub-controller are shown in the following tables (Tables 1-3).

Table 1. Fuzzy inference system for Fuzzy-Kp

e/Δe	NB	NS	Z	PS	PB
NB	VVB	VVB	VVB	VB	B
NS	VVB	VVB	VB	VB	B
Z	VB	VB	B	M	M
PS	B	M	M	M	M
PB	M	M	S	S	S

Table 2. Fuzzy inference system for Fuzzy-Ki

e/Δe	NB	NS	Z	PS	PB
NB	VVB	VB	B	B	B
NS	VVB	VB	VB	B	M
Z	B	M	S	S	S
PS	B	B	M	S	S
PB	M	S	S	S	S

TABLE 3. Fuzzy inference system for Fuzzy-Kd

e/Δe	NB	NS	Z	PS	PB
NB	S	S	M	M	VB
NS	S	S	S	S	M
Z	S	S	S	M	VB
PS	M	M	M	VB	S
PB	S	S	S	M	VB

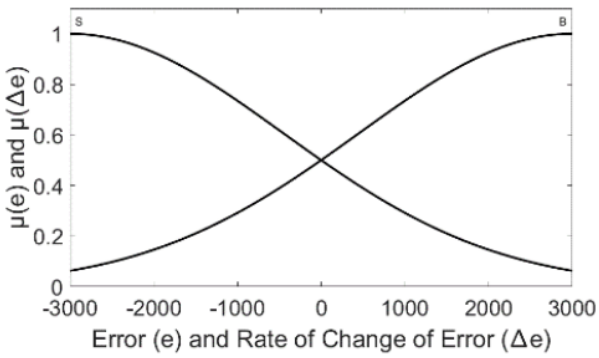

FIGURE 6. Membership function of ANFIS before data is trained

According to this case, it is obtained training data of each sub-controller. After the data is trained, some data is given to ANFIS as input and the output is checked between ANFIS results and its supervisor. Data given to ANFIS is the combination between two inputs (error and the change of error) and an output (a PID parameter: Kp, Ki, or Kd) obtained when the inputs are applied to each sub-controller of Fuzzy-PID structure.

On the other hand, the membership functions of ANFIS structure are using Gaussian function and have two membership functions of each input with grid partition method to define the parameter of membership function. Figure 6 shows the membership function of ANFIS inputs.

After data is trained to ANFIS, the parameter values of membership function of each input are changed as the results that ANFIS has learned the desired data. Figure 7 shows the change of ANFIS membership function parameters of each sub-controller after data is trained.

5. **Result and Analysis.** PID, Fuzzy-PID, and ANFIS control systems that were previously designed, then, will be simulated in several conditions from variations of reference speed and load. Then, it has been compared between PID, Fuzzy-PID, and ANFIS, so the best speed response among those controllers is obtained. BLDC motor parameters used in this simulation are shown in Table 4.

5.1. **Simulation with fix reference speed and load.** In this condition, the reference speed and load torque are set to be 3000 rpm and 8 N.m at $t = 0$. This value is the maximum value of speed change that can occur at the range of 0 to 3000 rpm. This condition is a reference for designing the control system so the transient current arising from changes in speed does not exceed 500 A, since it is the limit current provided to BLDC motor. The responses of each controller are then compared and evaluated. The speed response of each controller with fix reference speed is shown in Figure 8.

Based on the result of simulation, PID, Fuzzy-PID, and ANFIS control systems produce speed response at steady state condition with the value of 2982.50 rpm, 2997.08 rpm, and

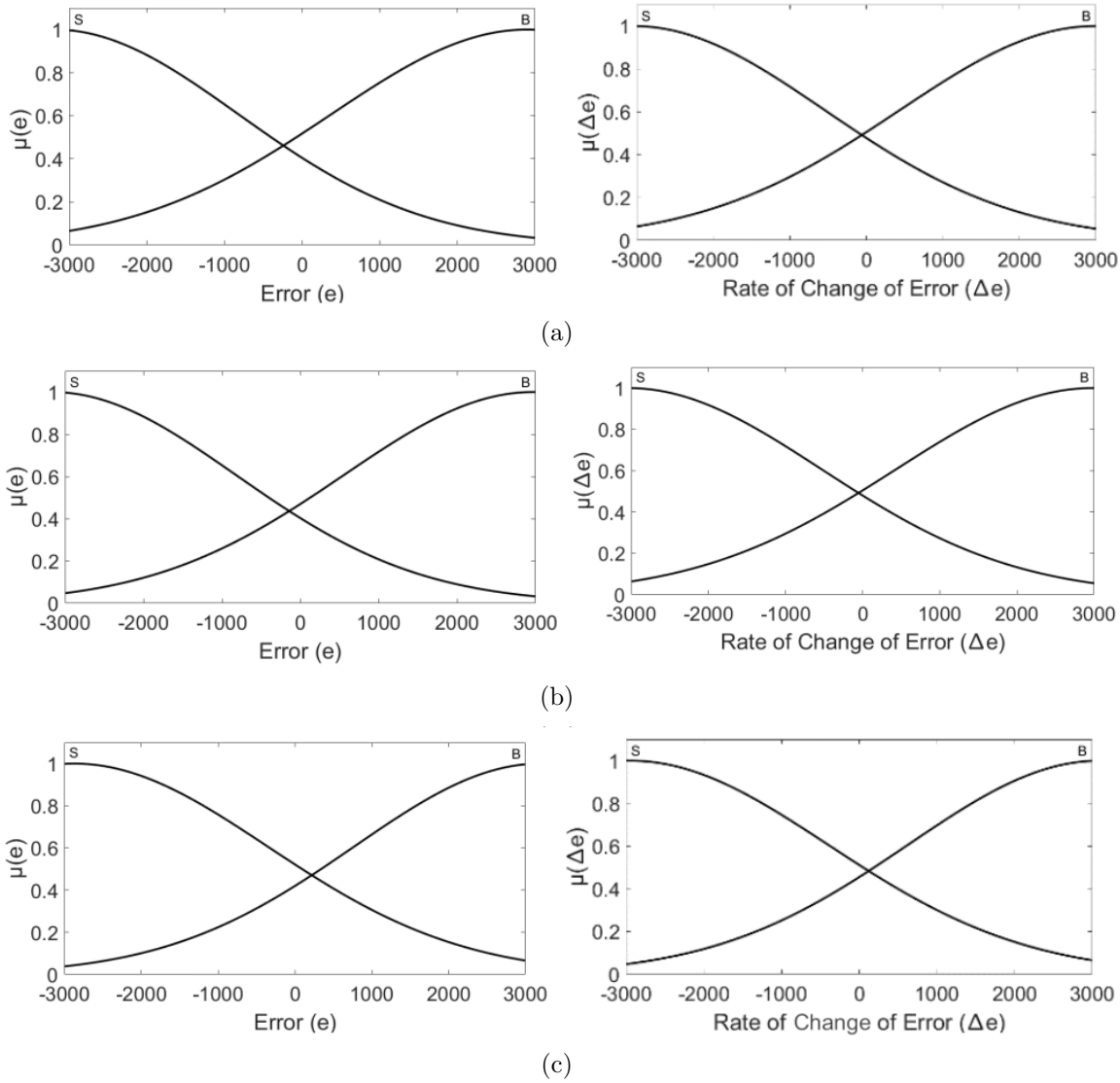

FIGURE 7. Membership function of ANFIS after data is trained: (a) sub-controller Kp; (b) sub-controller Ki; (c) sub-controller Kd

TABLE 4. BLDC motor parameters

Parameters	Value	Unit
R	0.18	Ω
L	835	μH
k_e	51.8384	volt/krpm
k_t	0.4287	N.m/A
B	0.0003035	N.m.s
J	0.00062	Kg.m^2
Pole pairs	4	–

2997.57 rpm. The rise time values of each controller are 0.48 seconds, 0.39 seconds, 0.27 seconds and the steady state errors are 0.58%, 0.1%, and 0.08% respectively. It can be shown that ANFIS controller produces better speed response compared to Fuzzy-PID and PID controllers.

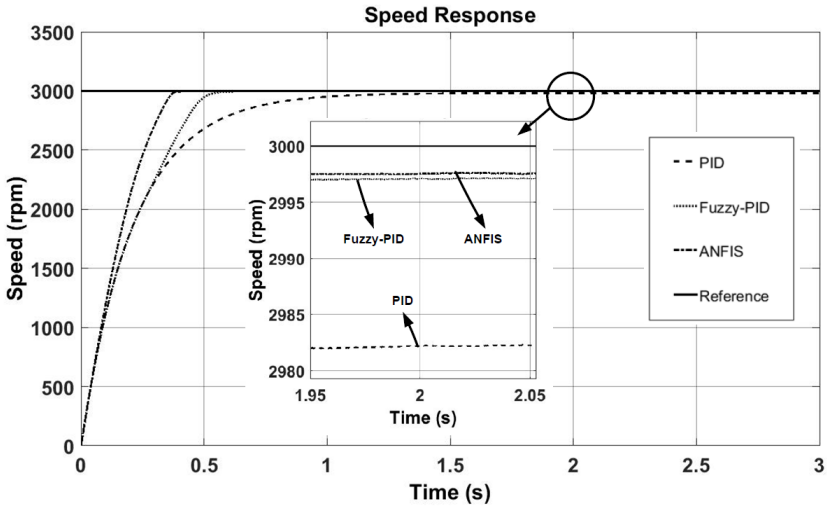

FIGURE 8. Speed response with fix reference speed and load

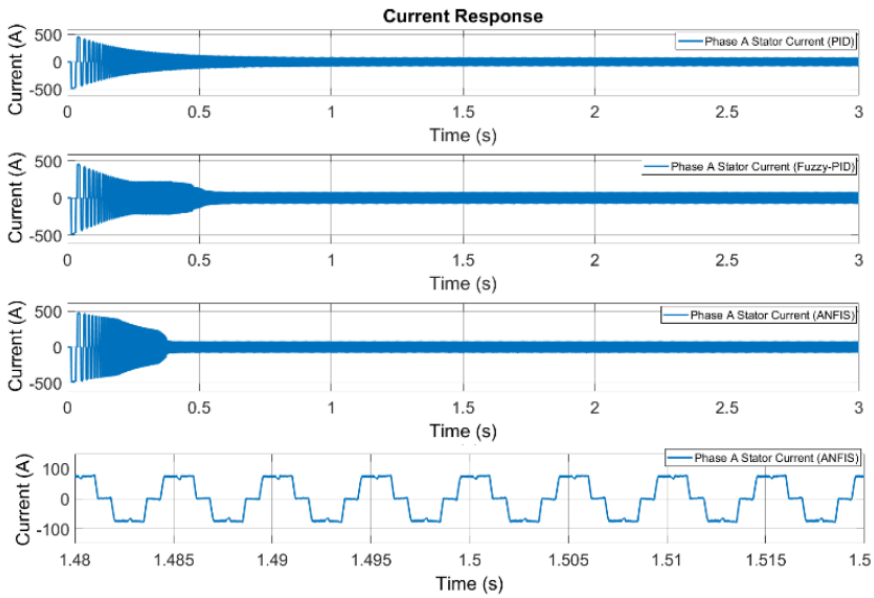

(a)

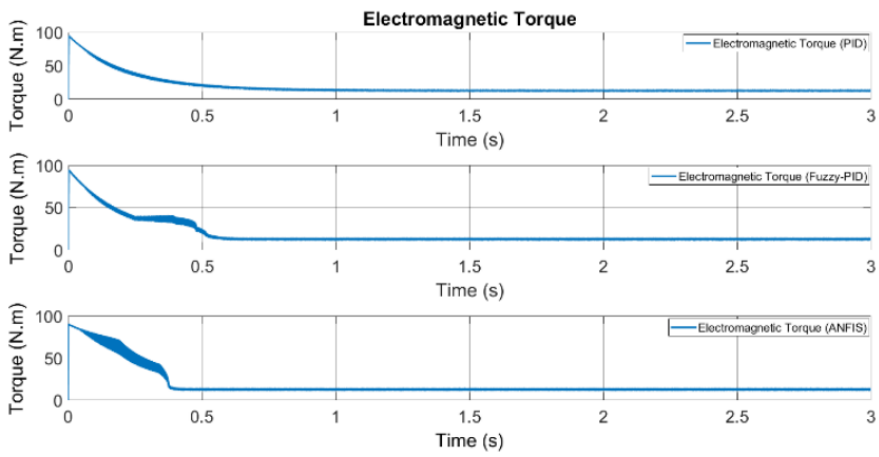

(b)

FIGURE 9. (a) Phase A stator current; (b) electromagnetic torque

The amount of current produced at each stator phase by using ANFIS controller has the maximum value 495.8 A. This value is lower compared to PID and Fuzzy-PID controller which is 496.5 A and 496.4 A respectively. It can be seen that the value of current peak for all controllers does not exceed 500 A. This is because the voltage between stator phase windings at starting period is chopped, so the starting current becomes small. In steady state condition, the simulation showed that the maximum current is around 100 A, and ANFIS needs shorter time to reach the steady state condition compared to the other controllers. And so, the electromagnetic torque peak generated for ANFIS controller reaches 90.66 Nm which is lower than those of other controllers. Torque generated during the starting period is large because the current that arises during starting period and motor has connected to the load. The results of electromagnetic torque and current response are shown in Figure 9.

5.2. **Simulation with fix reference speed and changing load.** In this condition, the reference speed is with the constant value of 1000 rpm at $t = 0$ and the load is set as 0. Then the load is changed at $t = 2$ s as 2 N.m, 3 N.m at $t = 3$, 8 N.m at $t = 4.5$ s, and is decreased at $t = 6.5$ s to 1 N.m. The change of load for different time simulation represents the BLDC motor used in the real condition, in which the load is always changed at any time. The load change of this condition is shown in Figure 10.

After simulation is done, it is obtained the speed response of each controller. The speed response according to this condition is shown in Figure 11. According to the simulation, ANFIS has better rise time value which is 0.1 s, compared to the other controllers, 0.19 s for Fuzzy-PID and 0.47 s for PID. The steady state speeds of each controller achieved before the load applied are 1012.80 rpm for PID, 1002.60 rpm for Fuzzy-PID, and 1001.78

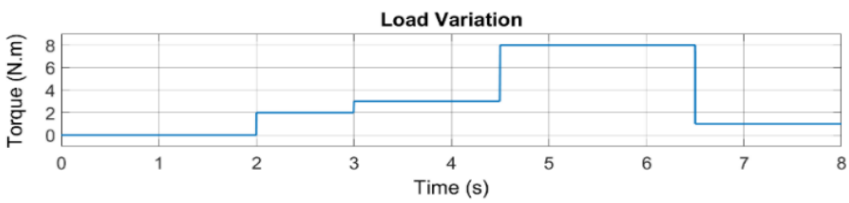

FIGURE 10. Load variation

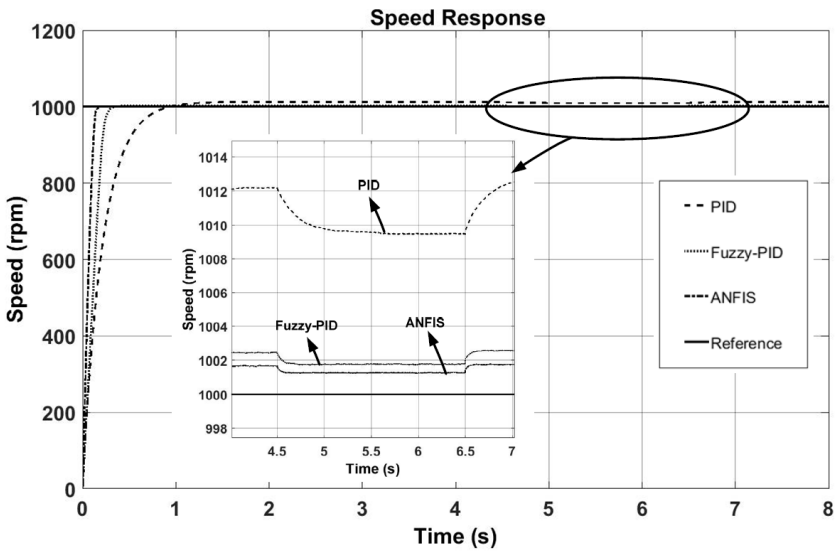

FIGURE 11. Speed response with fix reference speed and changing load

rpm for ANFIS. It can be shown that ANFIS controller results lower error steady state than the other ones. After the load applied, there is a change in the speed of each control system. For PID, Fuzzy-PID, and ANFIS controller, the speed change that occurs is when TL = 2 N.m is down by 0.03%, 0.01%, 0.01% of the speed before. When TL = 3 N.m and 8 N.m, the speed response is down by 0.04%, 0.01%, 0% and 0.26%, 0.07%, 0.04% respectively. Then when the load drops to TL = 1 N.m, the speed increases to 0.33%, 0.08%, 0.05%. In different load conditions, PID, Fuzzy-PID and ANFIS controllers have average steady state error value of 1.19%, 0.24%, and 0.16% respectively. It can be seen that ANFIS controller has the smallest steady state error value and tends to have small speed change, if load changes occurred compared to PID and Fuzzy-PID controllers. Figure 12 shows the current condition and the electromagnetic torque of each controller type.

It can be seen that the transient current at the starting period is under 500 A. The current value of each stator phase will increase if the given load increases and decreases

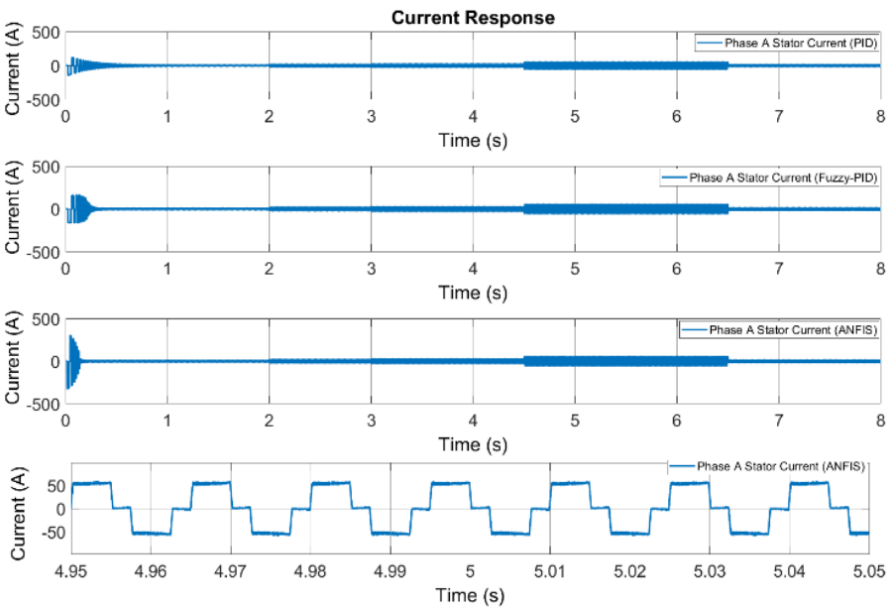

(a)

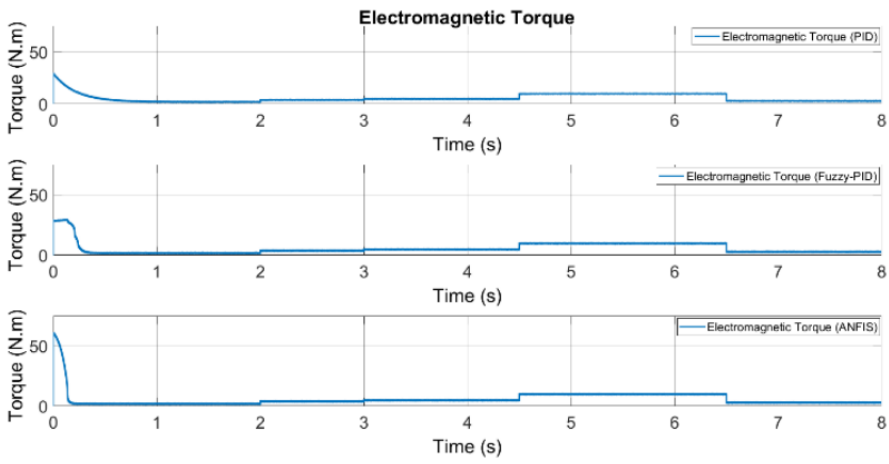

(b)

FIGURE 12. (a) Stator current of phase A; (b) electromagnetic torque

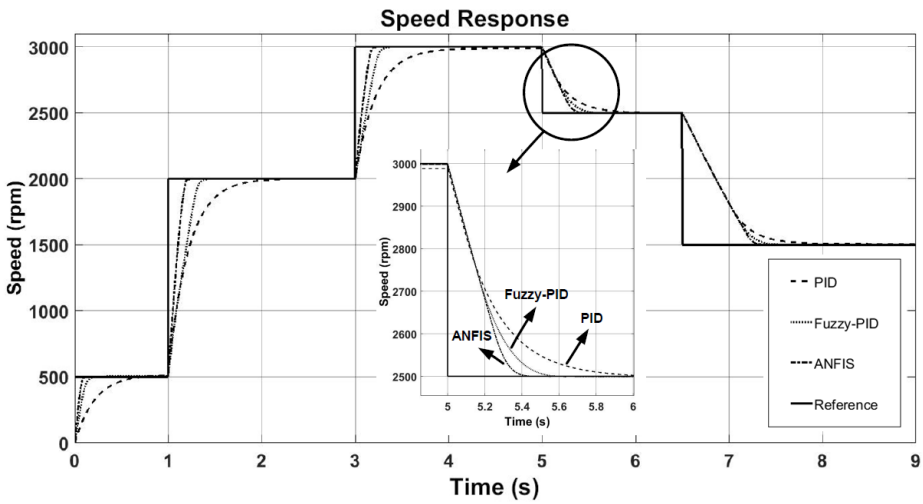

FIGURE 13. Speed response with changing reference speed and fix load

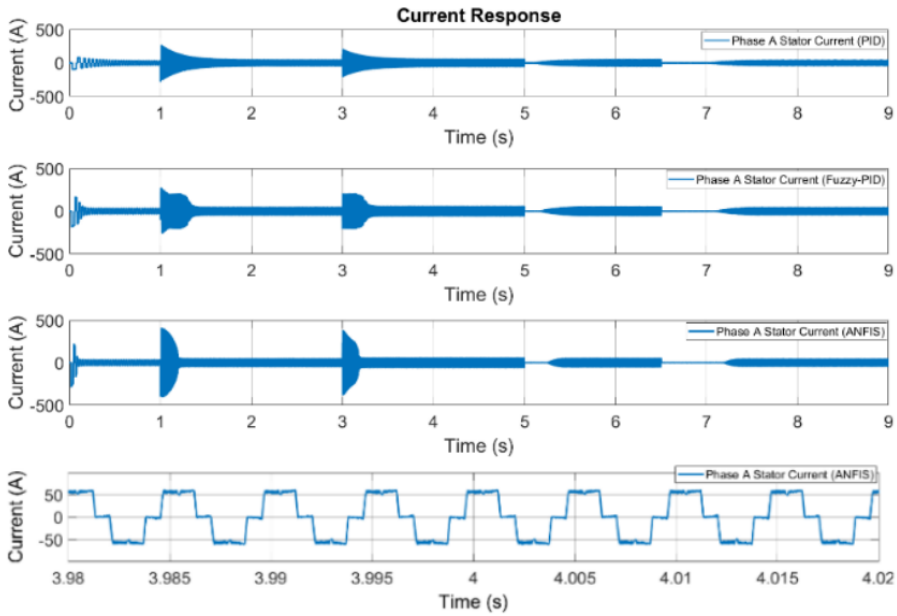

(a)

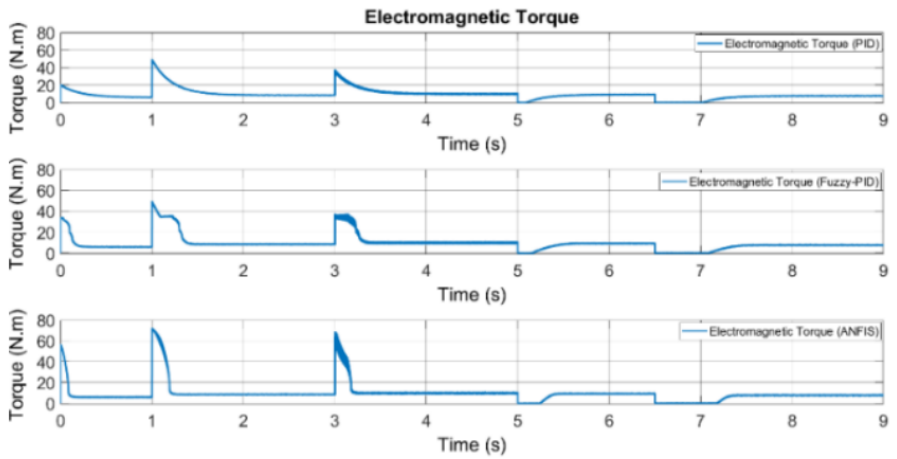

(b)

FIGURE 14. (a) Phase A stator current; (b) electromagnetic torque

when the load decreases. According to the simulation, ANFIS controller has a bigger starting current and torque compared to the other controllers, but has the shorter time to reach the steady state condition. The torque is proportional to the current occurring. The greater the current is, the higher torque will be.

5.3. **Simulation with changing reference speed and fix load.** In this condition, the reference speed is initially 500 rpm at $t = 0$, then changes to 2000 rpm, 3000 rpm, 2500 rpm, and 1500 rpm at $t = 1$, $t = 3$, $t = 5$, and $t = 6.5$. The torque given is constant, TL = 5 N.m. The result of the speed response from the motor according to this condition is shown in Figure 13.

Speed response of PID controller has large average steady state error value when compared to Fuzzy-PID and ANFIS which is equal to 0.83%, whereas, Fuzzy-PID and ANFIS are 0.18% and 0.13% respectively. According to this condition, ANFIS has better performance than the other controller. The current and electromagnetic graphs of the system are shown in Figure 14.

6. **Conclusion.** ANFIS for electric motorcycle speed controller has been designed and evaluated. ANFIS has been successfully trained using Fuzzy-PID supervision and has better performances compared to PID and Fuzzy-PID controllers, both in speed changes and load changes. In the case of speed changes, ANFIS has average steady state error as 0.13%, while Fuzzy-PID and PID got 0.18% and 0.83% respectively. Furthermore, in the case of load changes, ANFIS has average steady state error as 0.16%, while Fuzzy-PID is 0.24 and PID controller is 1.19%. ANFIS controller also has a better performance in the rise time which reaches 0.27 s for 3000 rpm, whereas, the other controllers have longer rise time to reach the reference speed. Therefore, it can be concluded that ANFIS controller produces better performance compared to PID and Fuzzy-PID controllers.

REFERENCES

[1] J. N. Ansari and S. L, Speed control of BLDC motor for electric vehicle, *International Journal of Engineering Research & Technology (IJERT)*, vol.3, pp.1666-1671, 2014.

[2] J. Zhao and Y. Yu, *Brushless DC Motor Fundamentals*, 2011.

[3] Y.-S. Lai, M. Xu and Y.-H. Chang, Novel loss reduction pulse width modulation technique for brushless DC motor drives fed by MOSFET inverter, *IEEE Trans. Power Electronics*, vol.19, pp.1646-1652, 2004.

[4] M. A. Shamseldin and A. A El-Samahy, Speed control of BLDC motor by using PID control and self-tuning fuzzy PID controller, *The 15th International Workshop on Research and Education in Mechatronics (REM)*, pp.1-9, 2014.

[5] A. Rubaai and P. Young, Hardware/software implementation of fuzzy-neural-network self-learning control methods for brushless DC motor drives, *IEEE Trans. Industry Applications*, vol.52, no.1, 2016.

[6] H. Suryoatmojo, M. Ridwan, D. C. Riawan, E. Setijadi and R. Mardiyanto, Hybrid particle swarm optimization and recursive least square estimation based ANFIS multioutput for BLDC motor speed controller, *International Journal of Innovative Computing, Information and Control*, vol.15, no.3, pp.939-954, 2019.

[7] K. Premkumar and B. V. Manikandan, Adaptive neuro-fuzzy inference system based speed controller for brushless DC motor, *Neurocomputing*, vol.138, 2014.

[8] J. S. R. Jang, ANFIS: Adaptive-network-based fuzzy inference system, *IEEE Trans. Systems, Man, and Cybernetics*, vol.23, pp.665-685, 1993.

[9] X. Gao, BLDC motor control with hall sensors based on FRDM-KE02Z, *Applicarion Note*, 2013.

[10] K. Premkumar and B. V. Manikandan, Speed control of brushless DC motor using bat algorithm optimized adaptive neuro-fuzzy inference system, *Applied Soft Computing*, vol.32, pp.403-419, 2015.

[11] C.-W. Hung, C.-L. Hsu, W.-L. Mao and Y.-R. Lu, The effect of variable torque constant on brushless DC motor, *ICIC Express Letters*, vol.12, no.8, pp.809-813, 2018.